endrich
components of life

novitronic
powered by endrich

LOGIC
TECHNOLOGIES

EMBEDDED COMPUTER

EMBEDDED COMPUTER (PANEL-PC)

Reserve technical changes!

EMBEDDED COMPUTER (PANEL-PC)

The Logic Technology Group was formed in 2008. Headquartered in Hong Kong with offices in Baar, Switzerland and Shenzhen, China specialise in designing, development and manufacturing of Embedded Computer Solutions under the DLOGIC brand. DLOGIC focuses on Closed and Open Embedded Computer Solutions starting from sizes of 4.3" up to 15.0". Available without Touch, with resistive as well as capactive Touch. The multi-layer optical bonding technology provides cover lens thickness of 4 mm and UL 751 S46B certification. The Embedded Platforms are currently based on the two different processor cores, Freescale (NXP) ARM Cortex A8, iMX537 and ARM9, iMX257.

Board DL-PM53 (x-Version)
• Freescale i.MX537 (ARM Cortex A8)
• Memory DDR3: 1 GB
• eMMC Flash: 8 GB
• Boot: SPI Flash 2 MB
• HW Real-time Clock

Board DL-PM25 (i-Version)
• Freescale i.MX257 (ARM9)
• Memory DDR2: 128 MB
• NAND Flash: MLC 2 GB
• Boot: SPI Flash 2 MB
• HW Real-time Clock

The boards are equipped with the following interfaces:

- USB2.0
- Ethernet
- MicroSD
- Galvanic isolated CAN-Bus
- 2x Serial
- I²C
- PWM
- GPIO

Logic Technologies guarantees availability of 7 years for DLOGIC Embedded Computer Solutions.

EMBEDDED COMPUTER (PANEL-PC)

EMBEDDED COMPUTER (PANEL-PC) 4.3" - 15.0"

SIZE	PART NUMBER	DISPLAY RESOLUTION	BRIGHTNESS [cd/m²]	RESISTIVE TOUCH PANEL	CAPACITIVE TOUCH PANEL (PCAP)	HOUSING	4 MM COVER LENS	BOARD DL-PM53	BOARD DL-PM25	REMARKS
4.3"	100934	480 x 272	550	•		•			•	Ultra-Wide Angle, 4-Wire Touch
4.3"	100950	480 x 272	550		•	•			•	Ultra-Wide Angle
5.0"	100933	800 x 480	550	•		•			•	Ultra-Wide Angle, 4-Wire Touch
5.0"	101186	800 x 480	550		•	•		•		Ultra-Wide Angle
5.0"	100828	800 x 480	550		•	•			•	Ultra-Wide Angle
5.0"	101314	800 x 480	550		•	•	•	•		Ultra-Wide Angle
5.0"	100831	800 x 480	550		•	•	•		•	Ultra-Wide Angle
7.0"	100871	800 x 480	550		•	•	•	•		Ultra-Wide Angle
7.0"	100832	800 x 480	550		•	•	•		•	Ultra-Wide Angle
7.0"	100870	800 x 480	550		•	•		•		Ultra-Wide Angle
7.0"	100829	800 x 480	550		•	•			•	Ultra-Wide Angle
7.0"	101259	800 x 480	550	•		•		•		Ultra-Wide Angle, 4-Wire Touch
7.0"	100834	800 x 480	550	•		•			•	Ultra-Wide Angle, 4-Wire Touch
9.0"	101072	800 x 480	550		•	•		•		Ultra-Wide Angle
9.0"	101069	800 x 480	550		•	•			•	Ultra-Wide Angle
10.1"	100833	1280 x 800	550		•	•	•	•		IPS
10.1"	100830	1280 x 800	550		•	•		•		IPS
10.1"	101258	1280 x 800	550	•		•		•		IPS, 4-Wire Touch
10.4"	100932	800 x 600	350	•		•			•	4-Wire Touch
15.0"	100835	1024 x 768	400	•		•		•		5-Wire Touch

Embedded Computer with 4 mm Cover Lens

EMBEDDED COMPUTER (PANEL-PC)

Reference drawing of a 10.1" Panel-PC

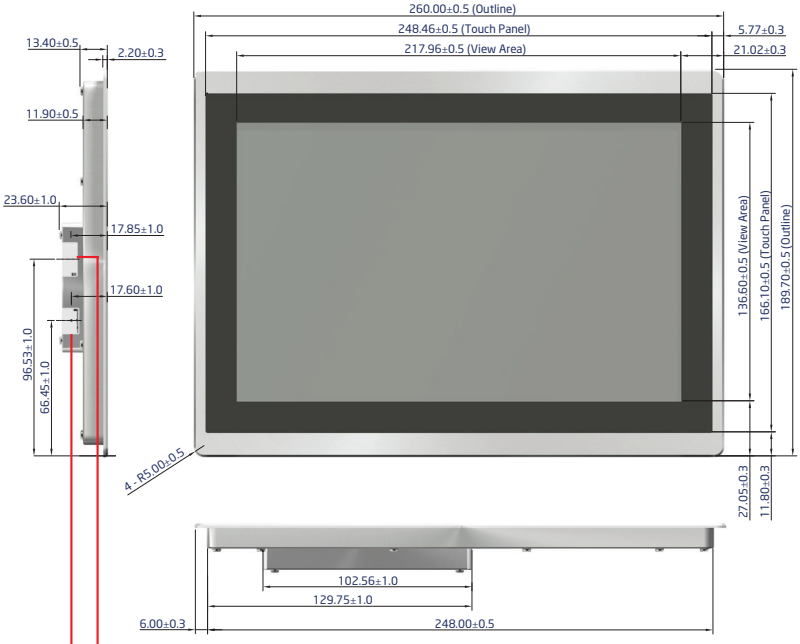

Secure locking connector 10~30Vdc

Secure locking connector
RS-232/I2C/CAN/MDB/SPI/PWM/GPIOs/SPDIF/3.3V

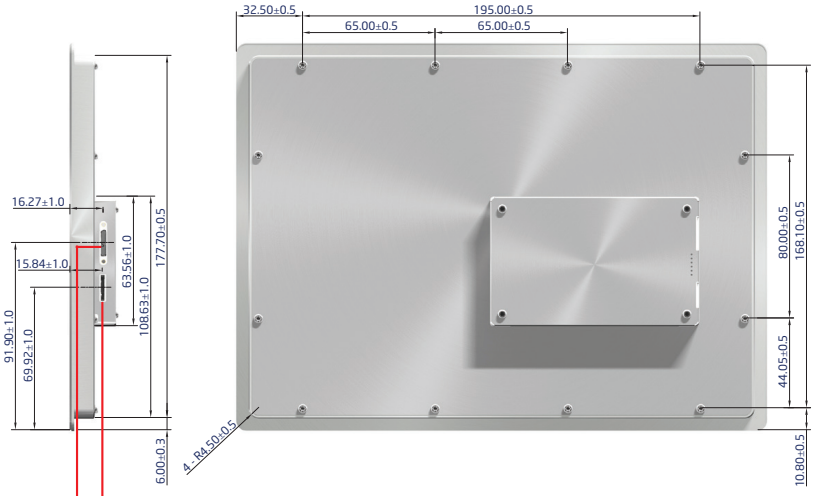

Micro SDHC

Screwlocked connector
Ethermet/USB

Patended IP housing for the Closed Embedded Computer Solutions

EMBEDDED COMPUTER (PANEL-PC)

EMBEDDED COMPUTER (PANEL-PC) EVAL-KITS 4.3" - 15.0"

SIZE	PART NUMBER	DISPLAY RESOLUTION	BRIGHTNESS [cd/m²]	RESISTIVE TOUCH PANEL	CAPACITIVE TOUCH PANEL (PCAP)	HOUSING	4 MM COVER LENS	BOARD DL-PM53	BOARD DL-PM25	REMARKS
4.3"	100945	480 x 272	550		•	•			•	Ultra-Wide Angle
4.3"	100961	480 x 272	550	•		•			•	Ultra-Wide Angle, 4-Wire Touch
5.0"	100962	800 x 480	550	•		•			•	Ultra-Wide Angle, 4-Wire Touch
5.0"	101185	800 x 480	550		•	•		•		Ultra-Wide Angle
5.0"	100946	800 x 480	550		•	•			•	Ultra-Wide Angle
7.0"	100948	800 x 480	550		•	•		•		Ultra-Wide Angle
7.0"	100947	800 x 480	550		•	•			•	Ultra-Wide Angle
7.0"	100963	800 x 480	550	•		•			•	Ultra-Wide Angle, 4-Wire Touch
7.0"	101279	800 x 480	550		•				•	Ultra-Wide Angle
9.0"	101074	800 x 480	550		•	•		•		Ultra-Wide Angle
9.0"	101073	800 x 480	550		•	•			•	Ultra-Wide Angle
10.1"	100949	1280 x 800	550		•	•		•		IPS
10.4"	100964	800 x 600	350	•		•			•	4-Wire Touch
15.0"	100965	1024 x 768	400	•		•		•		5-Wire Touch

Developer Kit accessories are Power Supply, Power Cable, 20-pin Interface Cable, DL-CB5 Developer Interface Board, USB & Ethernet Interface Cable

In the area of displays & embedded boards we also offer these products:

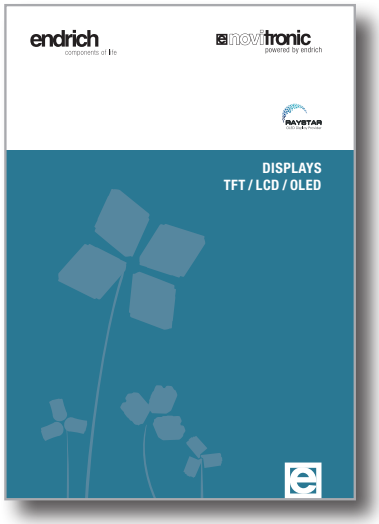

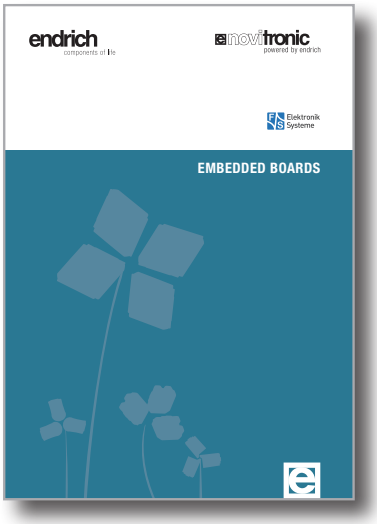

OFFICES IN EUROPE

Germany
Nagold (Headquarters)

Austria

France

Spain

Italy

Hungary

Bulgaria

Romania

Switzerland
novitronic
powered by endrich

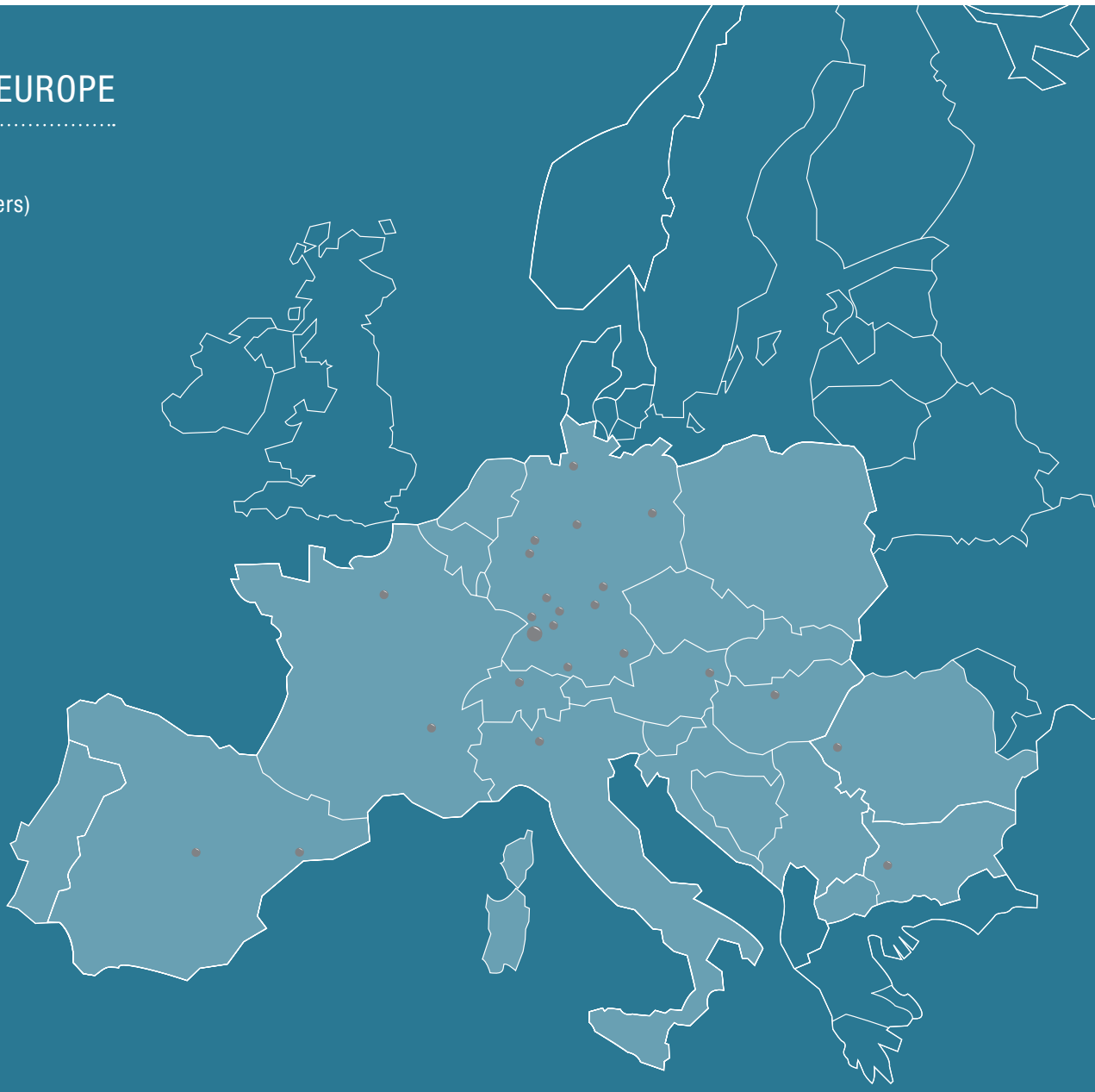

ENDRICH Bauelemente Vertriebs GmbH · P.O.Box 1251 · D-72192 Nagold
Tel.: +49 (0) 7452 6007-0 · Fax: +49 (0) 7452 6007-70 · endrich@endrich.com · www.endrich.com

NOVITRONIC GmbH · Hauptstraße 56 · D-72202 Nagold
Tel.: +49 (0) 7452 88780-20 · Fax +49 (0) 7452 88780-99 · info@novitronic.de · www.novitronic.de

NOVITRONIC AG · Thurgauerstrasse 74 · CH-8050 Zürich
Tel.: +41 (0)44 306 91 91 · Fax +41 (0)44 306 91 81 · info@novitronic.ch · www.novitronic.ch

www.endrich.com

09/2016